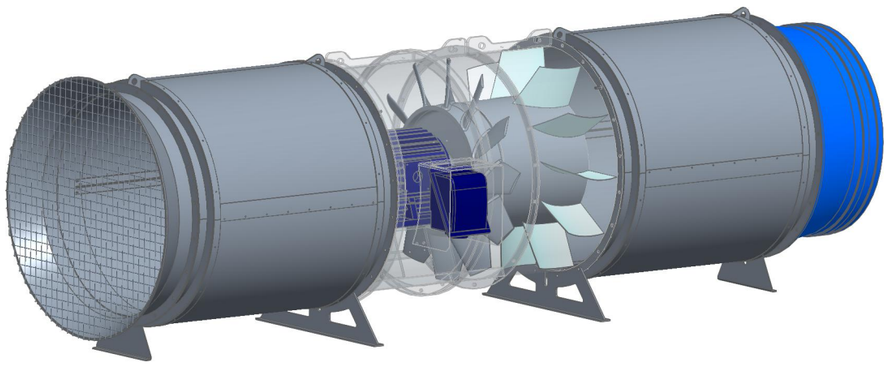

PARTS LIST

ITEM	PART NO	QTY	DESCRIPTION	MASS (kg)
1	1254-001	1	CC1254 GUIDE VANE- GV1 WELDED ASSY	171.1
2	1254-014	1	CC1254 MK3 AXIAL FAN CASING- 55kW INLET	307.4
3	1254-026	1	CC1254 INLET CONE	52.8
4	1254-035	1	CC1254 PLASTIC VENT TUBE ADAPTER TO 1220mm DUCT	17.5
5	1254-044	2	MOUNTING FOOT- CC1254 FAN- STD	34.2
6	1254-052	2	TRANSPORT FOOT- CC1254 SILENCER (STD & MIM SPEC)	7.6
7	1254-064	1	CC1254 MK3- 31.5deg 70mm BORE 75kW - INLET IMPELLER MACHINING	70.4
8	1254-146	2	CC1254 AXIAL FAN SILENCER- RIVETED ASSEMBLY	310.9
9	EM-029	1	TECO 75kW 4POLE 250MC FRAME 1000 VOLT MOTOR	570.0
10	MOTOR-TERM-BOX-TECO-D250	1	TERMINAL BOX- SUIT TECO D250 FRAME	26.0

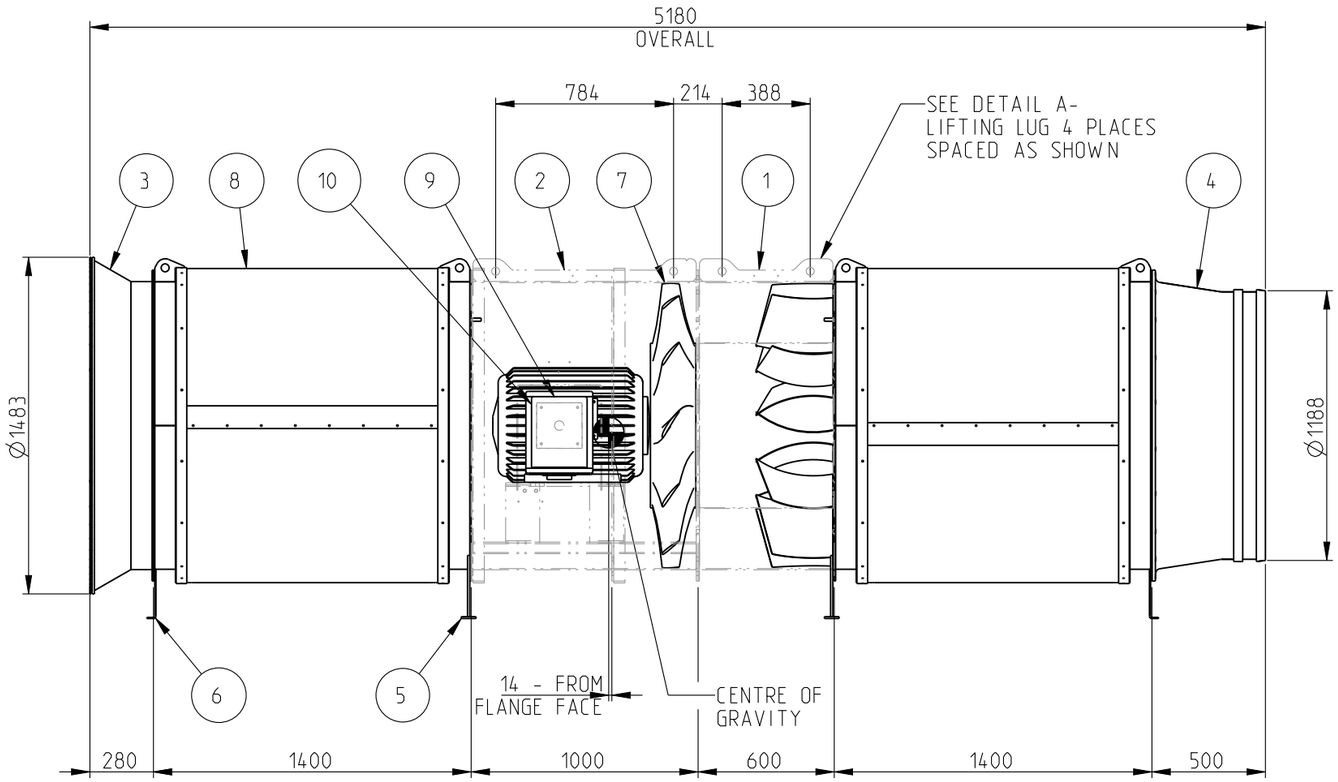

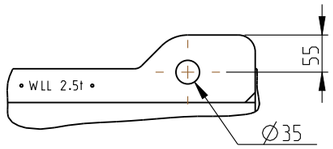

DETAIL A

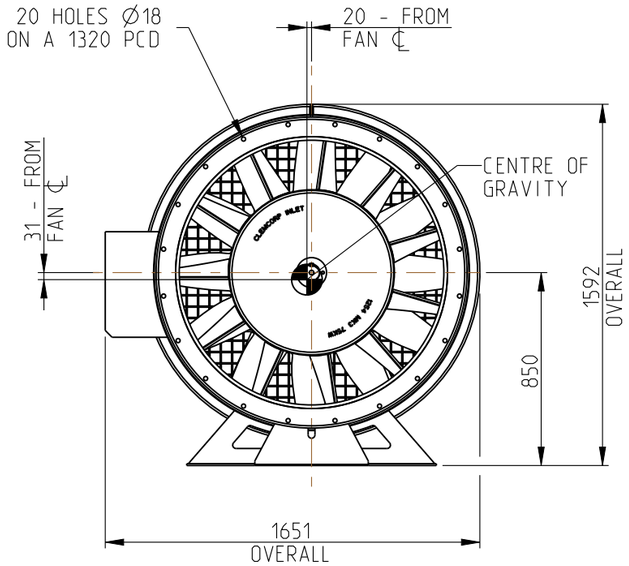

NOTES

1. ALL MOTOR HOLD DOWN BOLTS, NUTS AND WASHERS TO COMPLY WITH AS1110 CLASS 8.8 ZINC PLATED. CONE LOCKING NUTS TO BE USED. ENSURE BOLTS ARE TIGHTENED TO CORRECT TORQUE
2. ALL FLANGE BOLTS, NUTS AND WASHERS TO COMPLY WITH AS1111 CLASS 4.6 ZINC PLATED U.N.O

MASS:	SURFACE AREA:	VOLUME:
1567.9 kg	95.06 m^2	0.779 m^3

MATERIAL: -

PROJECTION: TOLERANCE: U.N.O

ALL DIMENSIONS IN MM U.N.O
DRAFTING STANDARD AS1100
DO NOT SCALE

X° ± 0.5°
X ± 1
X.X ± 0.2
X.XX ± 0.02
>1000 mm + ± 2

COPYRIGHT

This drawing including the principles of design is the property of and is submitted by CLEMCORP (WA) Pty Ltd with the agreement that it is not to be reproduced, copied or loaned in part or whole it is not to be used in any manner that may constitute a detriment directly or indirectly to CLEMCORP (WA) Pty Ltd. Acceptance of this drawing will be construed as an agreement to the above.

CLEMCORP (WA) Pty Ltd
trading as
Clemcorp Australia
ABN: 54 115 959 683

PO Box 4249
Alexander Heights 6064
Western Australia
Ph: (08) 9406 3000
Fax: (08) 9406 3001
www.clemcorp.com.au

CC1254 Mk3 75kW 4P 1000V 1S IN IC 2SIL VTA

DATE	DESCRIPTION	REV	BY
16-08-21	SILENCERS REPLACED WITH NEW RIVETED SILENCERS. CENTRE OF GRAVITY ADDED.	3	L PADGETT

Drawn	L PADGETT	12-04-21	Drawing Number	Rev.
Checked	.	Scale	1254-514	3
Approved	.	NTS	SHEET 1 OF 1	Design